! Pin screw for additional locking of the fiber ferrule:
- before pulling the FC-connector:
  unlock the pin screw.
- before inserting the FC-connector:
  make sure the ferrule receptacle is not blocked
  by the pin screw !

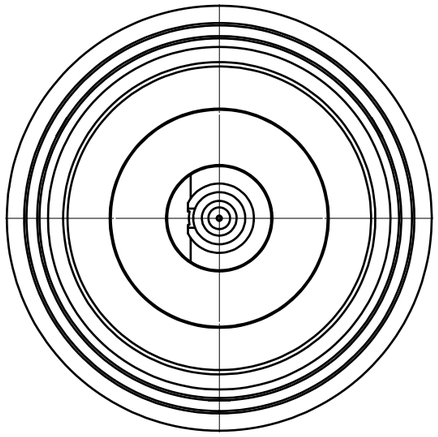

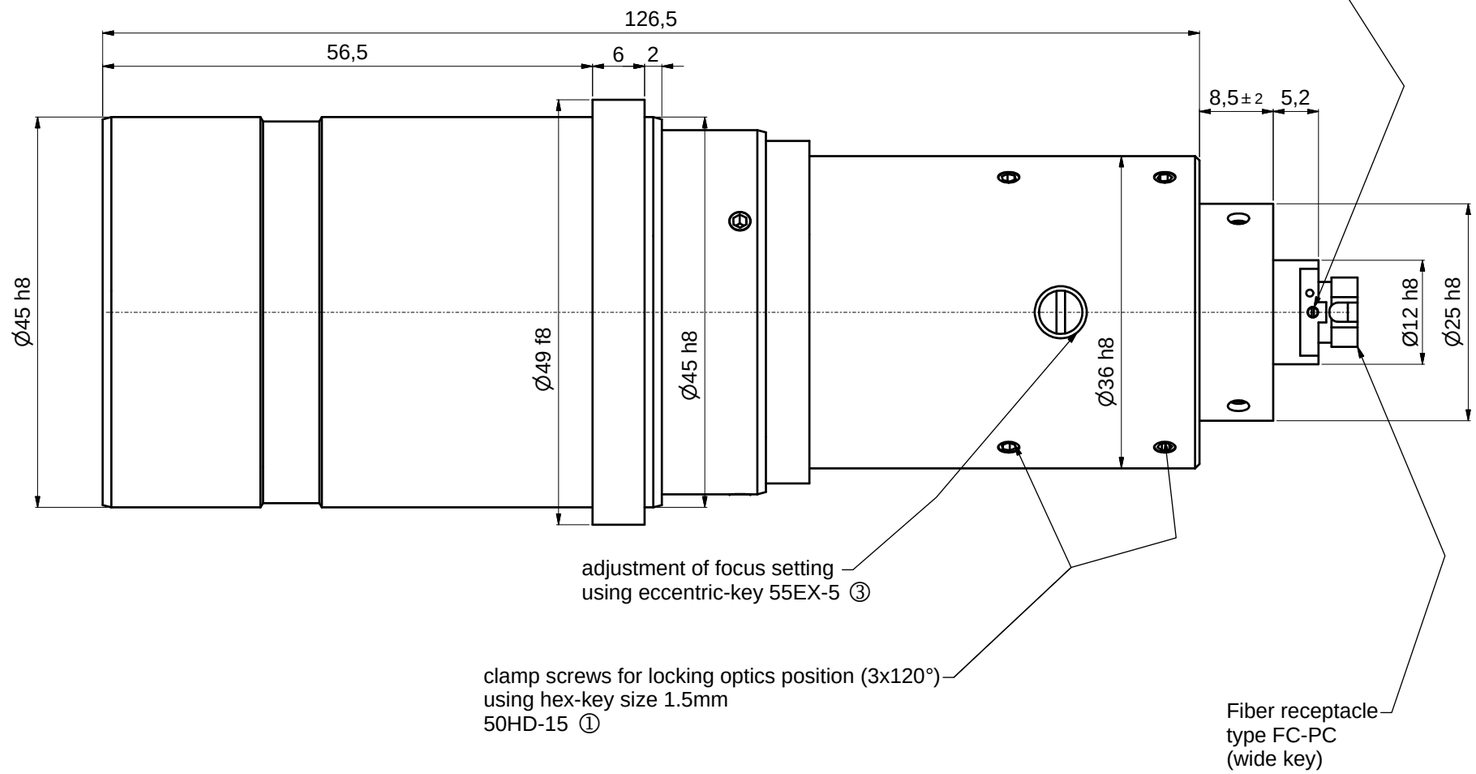

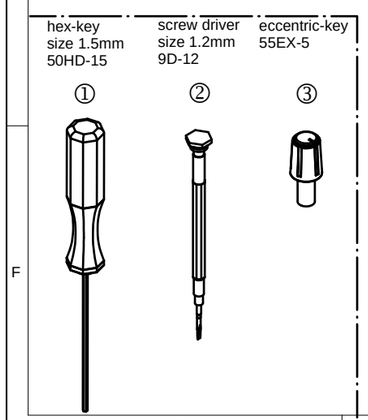

! Don´t touch any other screws !

						Allgemein-toleranz ISO 2768 - f	Maßstab: 2:1
							60FC-L-0-M125-xx
					Datum	Name	Fiber collimator f'125
				Bearb.	23.01.2015		
				Gepr.			Fiber receptacle type FC-PC
				Norm			
				Schäfter&Kirchhoff OPTO-SENSORIK UND MESSTECHNIK			9802-4180-0026 — Blatt A2 — Blatt: 2
Zust.	Änderungen	Datum	Name	Datei: 980241800026.idw			Model: 980241800026.iam