! Pin screw for additional locking of the fiber ferrule:
- before pulling the FC-connector:
  unlock the pin screw.
- before inserting the FC-connector:
  make sure the ferrule receptacle is not blocked
  by the pin screw !

clamp screws
for accessory optics (3x120°)
using hex-key size 1.5mm
50HD-15 ①
(screws not included)

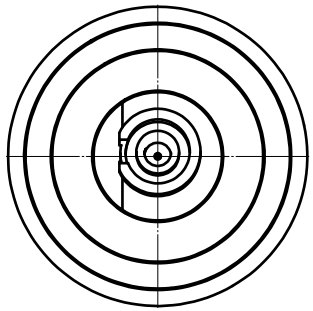

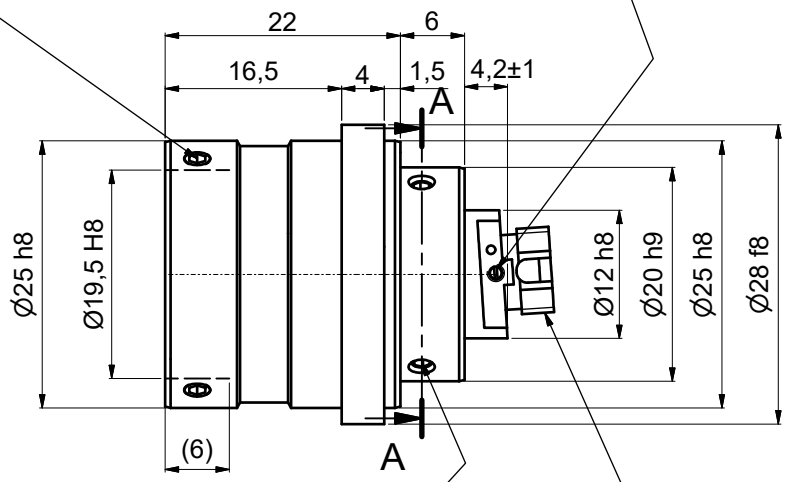

A-A

clamp screws for adjustment
fiber collimator (2x120°)
using hex-key size 1.5mm
50HD-15 ①

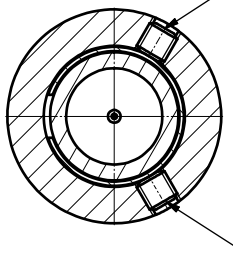

clamp screws for locking focus setting (2x120°)
using hex-key size 1.5mm
50HD-15 ①

Fiber receptacle
type FC-APC

Tools for assambly and adjustment

hex-key
size 1.5mm
50HD-15
①

screw driver
size 1.2mm
9D-12
②

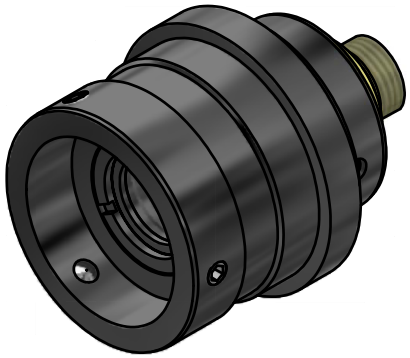

! Don´t touch any other screws !

					Allgemein-toleranz ISO 2768 - f	Maßstab: 2:1	
						60FC-L-4-M20L-04, -24, -26, -37	
				Datum	Name	Fiber Collimator f´20mm	
				Bearb. 14.03.2017	Tp		
				Gepr.		Fiber receptacle type FC-APC	
				Norm			
				Schäfter&Kirchhoff OPTO-SENSORIK UND MESSTECHNIK		9512-1019-0134	Blatt A3
Zust.	Änderungen	Datum	Name	Datei: 951210190134.idw		Model: 951210190134.iam	Blatt: 1