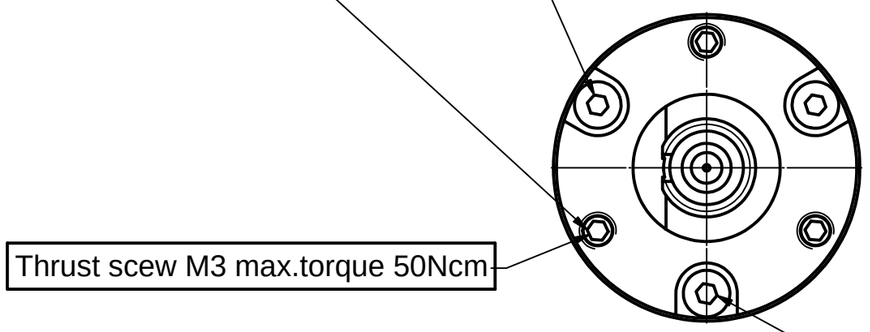

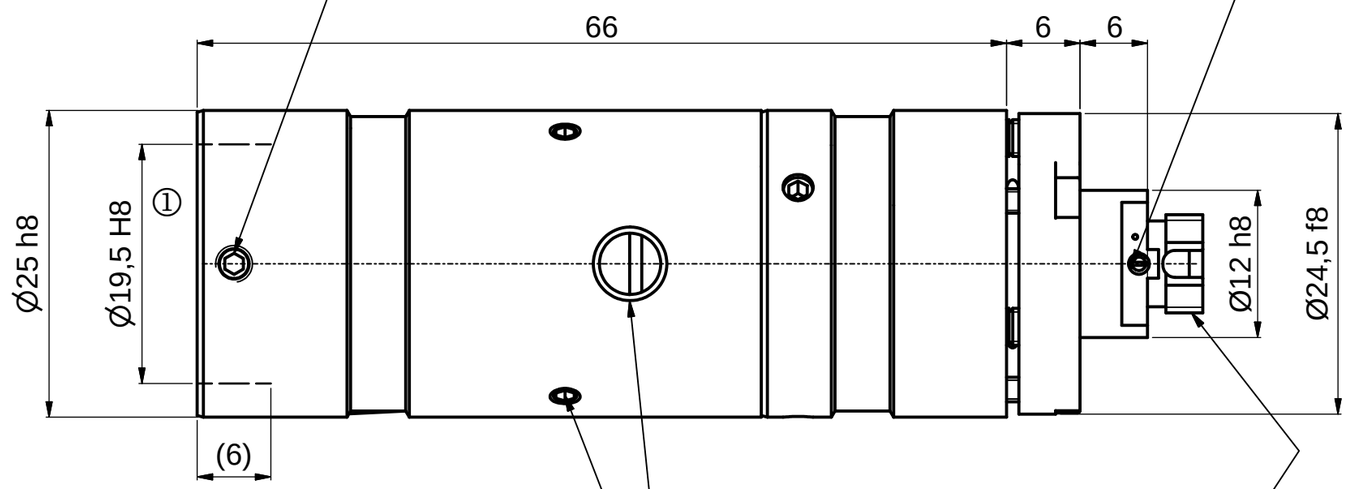

! Pin screw for additional locking of the fiber ferrule:
- before pulling the FC-connector:
  unlock the pin screw.
- before inserting the FC-connector:
  make sure the ferrule receptacle is not blocked
  by the pin screw !

②

Tools for assambly and adjustment

hex-key size 1.5mm 50HD-15	screw driver size 1.2mm 9D-12	eccentric-key 55EX-5
①	②	③

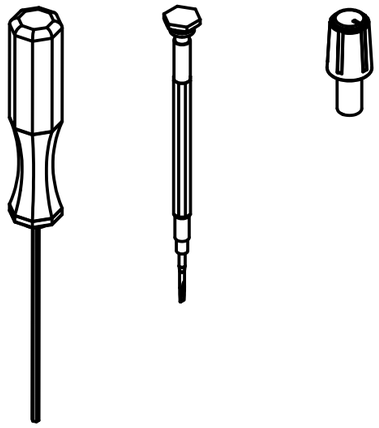

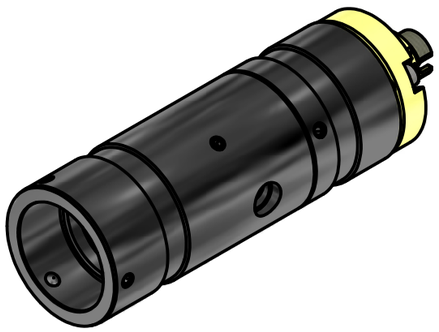

! Don´t touch any other screws !

						Allgemein-toleranz ISO 2768 - f	Maßstab: 2:1
							60FC-T-0-M60-xx
					Datum	Name	Fiber collimator f'60mm
				Bearb.	29.07.2015	Tp	
				Gepr.			Fiber receptacle type FC-PC
				Norm			
				Schäfter&Kirchhoff OPTO-SENSORIK UND MESSTECHNIK OPTIK-ENTWICKLUNG•ELEKTRONIK•SENSORTECHNIK•SOFTWARE			9803-1223-5900
Zust.	Änderungen	Datum	Name	Datei: 980312235900.idw			Model: 980312235900.iam

Blatt A3 — Blatt: 2