Thrust and tension screw (3x120°)
for tilt adjustment
with hex key wrench size 1.5mm
50HD-15 ①

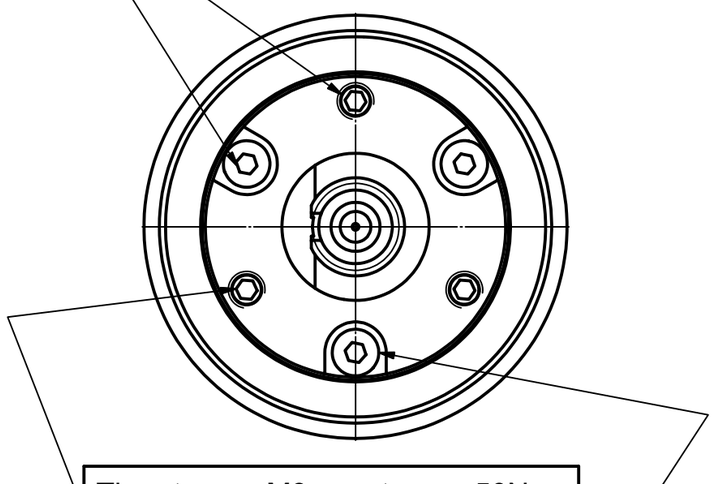

Thrust scew M3 max.torque 50Ncm

Tension scew M2 max.torque 40Ncm

! Pin screw for additional locking of the fiber ferrule:
- before pulling the FC-connector:
  unlock the pin screw.
- before inserting the FC-connector:
  make sure the ferrule receptacle is not blocked
  by the pin screw !

②

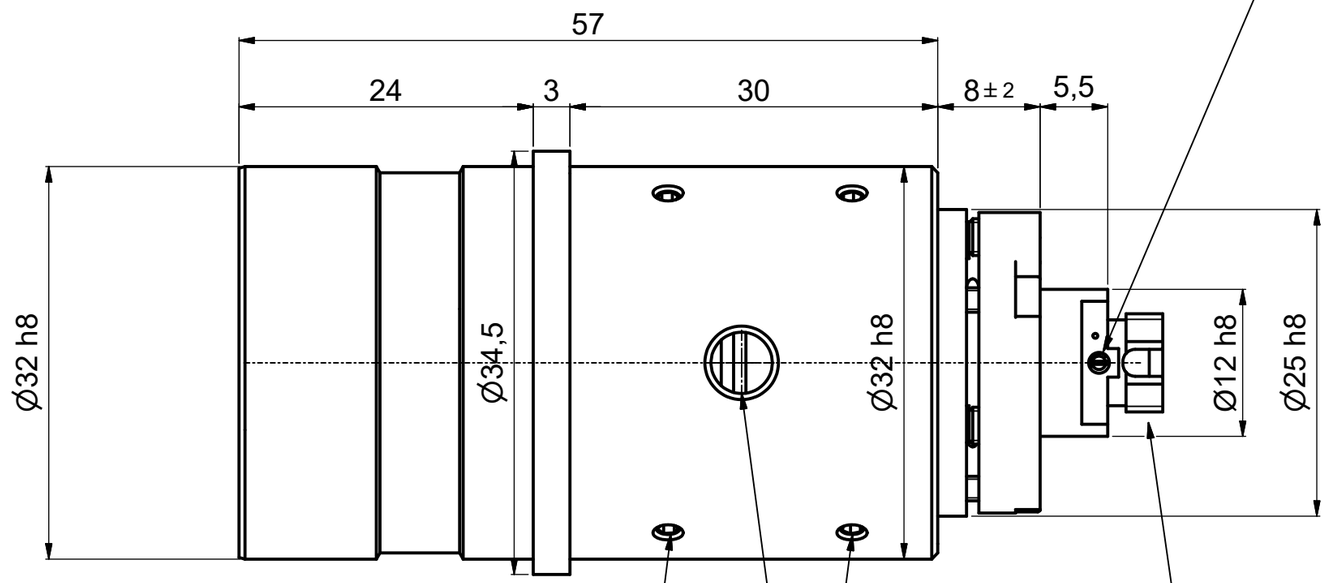

Fiber receptacle
type FC-PC
(wide key)

Stop screw (3x120°) for locking
optics position
using hex key 1.5mm
50HD-15 ①

adjustment of focus setting
using eccentric-key 55EX-5 ③

hex-key
size 1.5mm
50HD-15
①

screw driver
size 1.2mm
9D-12
②

eccentric-key
55EX-5
③

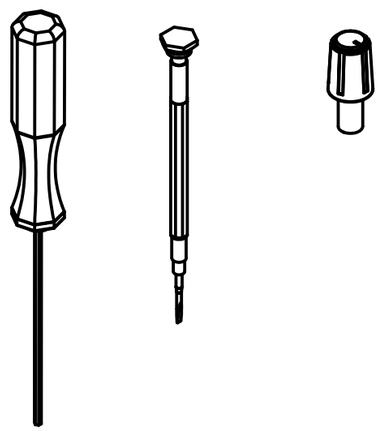

! Don´t touch any other screws !

						Allgemein-toleranz ISO 2768 - f	Maßstab: 2:1
							60FC-T-0-M60L-xx
					Datum	Name	Fiber collimator f'60
				Bearb.	21.03.2017	Tp	
				Gepr.			Fiber receptacle type FC-PC
				Norm			
				Schäfter&Kirchhoff OPTO-SENSORIK UND MESSTECHNIK OPTIK-ENTWICKLUNG•ELKTRONIK•SENSORTECHNIK•SOFTWARE			9802-4187-0001
Zust.	Änderungen	Datum	Name	Datei: 980241870001.idw			Model: 980241870001.iam

Blatt A3
Blatt: 1